SAFETY INFORMATION SHEET

WARNING

INSTALLATION OF THIS PRODUCT NEAR POWER LINES IS DANGEROUS. FOR YOUR SAFETY, FOLLOW THE ENCLOSED INSTALLATION DIRECTIONS.

HOW TO INSTALL YOUR OUTDOOR ANTENNA SAFELY IN ACCORDANCE WITH THE RECOMMENDATIONS OF THE U.S. CONSUMER PRODUCT SAFETY COMMISSION

These safety recommendations apply to all SIRIO commercial, amateur and general purpose communication antennas. SIRIO antenne assumes no liability if faulty or dangerous installation practices are used. There are available, trained and experienced personnel to assist in installation, maintenance, or disassembly. Contact your local installer if consultation or assistance is required.

YOU, YOUR ANTENNA, AND SAFETY

Each year hundreds of people are killed, mutilated or receive severe permanent injuries when attempting to install an antenna. In many of these cases, the victim was aware of the danger of electrocution, but did not take adequate steps to avoid the hazard.

For your safety, and to help you achieve a good installation, please **READ** and **FOLLOW** the safety precautions below. **THEY MAY SAVE YOUR LIFE!**

1. If you are installing an antenna for the first time, please, for your own safety as well as others, seek PROFESSIONAL ASSISTANCE. Consult your dealer. He can explain which mounting method to use for the size and type antenna you are about to install.

2. Select your Installation site with safety, as well as performance, in mind. (Detailed information on Site Selection appears in a separate section of this booklet.) **REMEMBER:** ELECTRIC POWER LINES AND PHONE LINES LOOK ALIKE. FOR YOUR SAFETY, ASSUME THAT ANY OVERHEAD LINES CAN KILL YOU.

3. Call your electric power company. Tell them your plans and ask them to come look at your proposed installation. This is a small inconvenience considering **YOUR LIFE IS AT STAKE**.

4. Plan your installation procedure carefully and completely before you begin. Successful raising of a mast or tower is largely a matter of coordination. Each person should be assigned to a specific task, and should know what to do and when to do it. One person should be designated as the "boss" of the operation to call out instructions and watch for signs of trouble.

5. When installing your antenna, **REMEMBER**:
   DO NOT use a metal ladder. **DO NOT** work on a wet or windy day.
   DO dress properly -shoes with rubber soles and heels, rubber gloves, long sleeve shirt or jacket.

6. If the assembly starts to drop, get away from it and let it fall. Remember, the antenna, mast, cable and metal guy wires are all excellent conductors of electrical current. Even the slightest touch of any of these parts to a power line complete an electrical path through the antenna and the installer-**THAT'S YOU!**

7. If any part of the antenna system should come in contact with a power line**-DON'T TOUCH IT OR TRY TO REMOVE IT YOUR SELF. CALL YOUR LOCAL POWER COMPANY**. They will remove it safely.

   If an accident should occur with the power lines call for qualified emergency help immediately.

SITE SELECTION

Before attempting to install your antenna, think where you can best place your antenna for **safety** and **performance**.

To determine a safe distance from wires, power lines and trees:
1. Measure the height of your antenna.
2. Add this length to the length of your tower or mast, and then
3. Double this total for the minimum recommended safe distance.

If you are unable to maintain this safe distance, **STOP! GET PROFESSIONAL HELP.** Many antennas are supported by pipe masts attached to the chimney, roof or side of the house. Generally, the higher the antenna is above the ground, the better it performs. Good practice is to install your antenna about 5 to 10 feet above the roof line and away from power lines and obstructions. Remember that FCC limits your antenna height to 60 feet. If possible, find a mounting place directly above your set, where the antenna wire can take a short, vertical drop on the outside of the house for entry through a wall or window near the set. Your dealer carries a complete line of installation hardware.

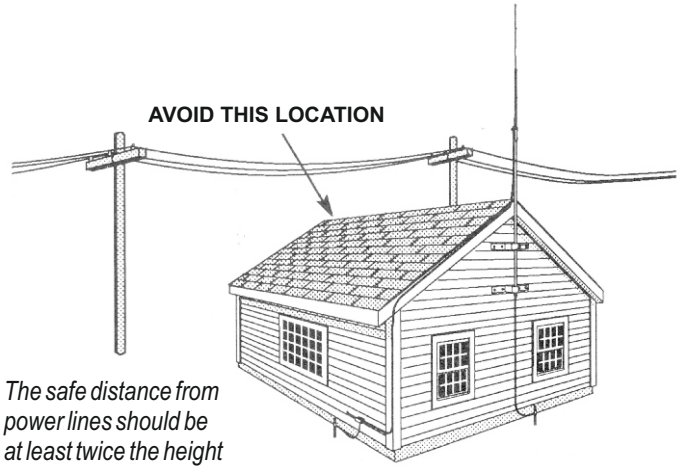

The safe distance from power lines should be at least twice the height of the antenna and mast combined.

CHOOSE A PROPER SUPPORT AND MOUNTING METHOD

However you decide to mount and support your antenna always make sure that safety is your first concern. Some of the more common installation methods are illustrated below.

ROOF MOUNTED

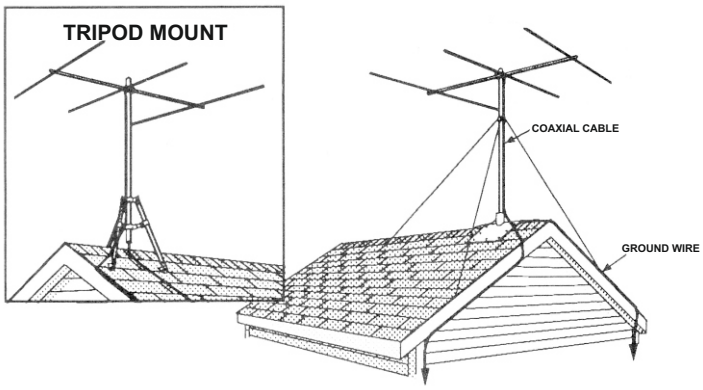

ROOF MOUNTING

The swivel feature of "universal" type mounting brackets makes a convenient antenna mount for flat or peaked roofs. One clamp type bracket is used with 3 or 4 guy wires equally spaced around the mast and anchored to the roof or eaves by eyebolts. Apply roofing compound around the base of the bracket, screws and eyebolts for moisture sealing.

TELESCOPING MAST

Guy wires should be equally spaced in at least three directions. Use at least three guy wires for each 10 foot section of mast.

SIDE OF HOUSE MOUNTING

The safe distance from power lines is at least twice the height of antenna and mastcombined. Where roofoverhang is not excessive, the side ofthe house provides a convenient mounting. Position the brackets over a stud if possible, one above the other, and space two or three feet apart. For metal siding, first mark mounting holes, then drill pilot holes through the siding to accept mounting screws.

TOWER

Tower safety is paramount to a good installation and requires that you take location, tree growth, soil depth and proximity to buildings into consideration. Tower foundations must be securely based on a solid concrete/ tower mounting plate. An alternative is to sink a 4-6 foot section of tower into a concrete base for an extremely rugged mount. Proper guying is essential to a safe weather-resistant installation that must handle severe wind loading and is best accomplished with preformed guy grips, torque brackets and turnbuckles. When working on towers always use a safety belt made of high quality web-type material

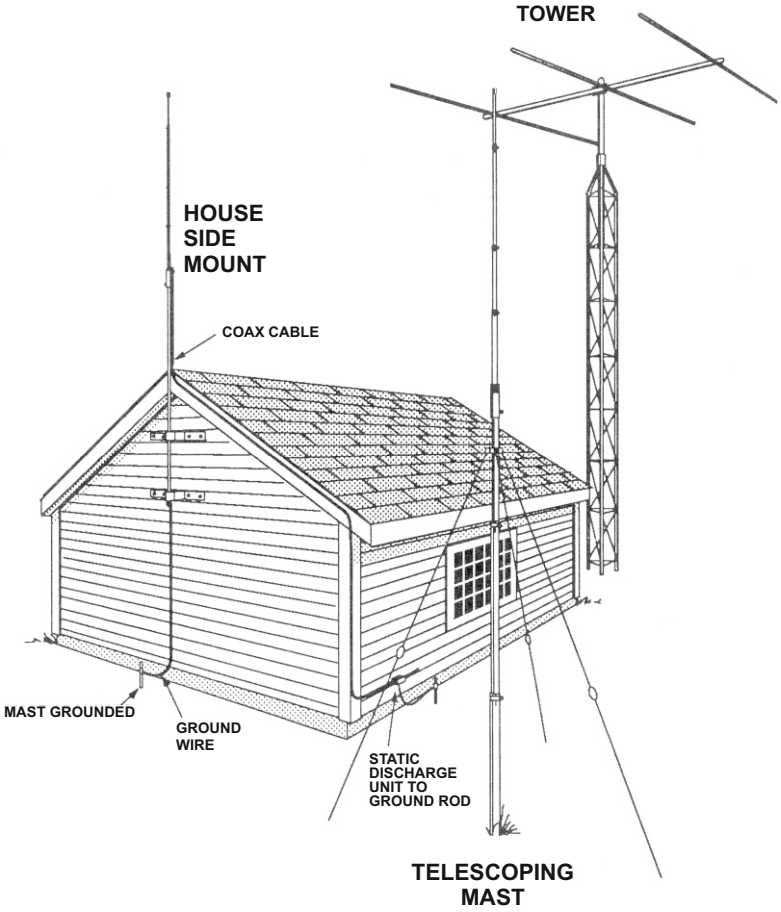

CHIMNEY MOUNTING

The chimney is often an easy and convenient mounting place. But the chimney must be strong enough to support the antenna in high winds. Do not use a chimney that has loose bricks or mortar. A good chimney mount makes use of a 5 or 10 foot, 1-1/4" diameter steel mast, and a heavy duty two strap clamp-type bracket. Install the upper bracketjust below the top course of bricks, and the lower bracket two or three feet below the upper bracket. For maximum strength, space the brackets as lar apart as possible.

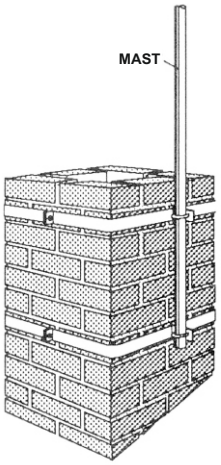

GENERAL INSTALLATION INSTRUCTIONS FOR MAST MOUNTED ANTENNAS

1. Assemble your new antenna on the ground at the installation site. Keep separate assembly instructions that come with it. Large CB and Amateur beams may have to be finally assembled on the tower or mast.

2. On the ground, clamp the antenna to mast and connect the coaxial cable to the antenna.

3. To insure that the mast does not fall the "wrong way" if it should get away during the installation or takedown, durable non-conductive rope should be secured at each two foot level as the mast is raised. The boss stands in a position where he can yank or pull the ropes if the need arise to deflect the falling mast away from hazards (such as power lines) into a "safe fall" (such as a yard or driveway). The ropes are tied taut at the base of the mast after installation and in place at the various levels.

4. Install selected mounting bracket.

5. If you are going to use guy wire installation instead of a mounting bracket:
   - install guy anchor bolts
   - estimate length of guy wire and cut
   - attach a mast using guy ring

6. Carefully take antenna and mast assembly to mounting bracket and insert. Tighten camp bolts. In case of guyed installation, it will be necessary to have at least a second person hold the mast upright while the guy wires are attached and tightened to the anchor bolts.

7. Install self-adhering "**DANGER**" label packaged in antenna hardware kit at eye level on your mast.

8. Install ground rod to drain off static electricity build-up and connect ground wire to mast and ground rod. Use special ground rods, not a spare piece of pipe.

EXAMPLE OF ANTENNA GROUNDING AS PER NATIONAL ELECTRICAL CODE INSTRUCTIONS

1. Use No. 10 AWG copper or No. 8 AWG or larger copper-clad steel or bronze wire, as ground wires for both mast and lead-in. Securely clamp the wire to the bottom of the mast.

2. Secure lead-in wire from antenna to antenna discharge unit and mast ground wire to house with stand-off insulators spaced from 4 feet (1.2 meters) to 6 feet (1.8 meters) apart.

3. Mount antenna discharge unit as close as possible to where the lead-in wire enters the house.

4. Drill a hole in wall (CAREFUL! There are wires in thatwall.) near your set just large enough to permit entry of cable.

5. Push cable through hole and form a rain drip loop close to where it enters the house.

6. Put small amount of caulking around cable where it enters house to keep out drafts.

7. Install static electricity discharge unit.

8. Connect antenna cable to the set.

You should not attempt to raise a mast in excess of 30 feet in height/length (not including the antenna proper) in a fully-extended condition. Thirty to fifty foot tubular masts must be elevated , a section at a time, with the base or outer section secured in place with guy wires. **GET PROFESSIONAL HELP**.

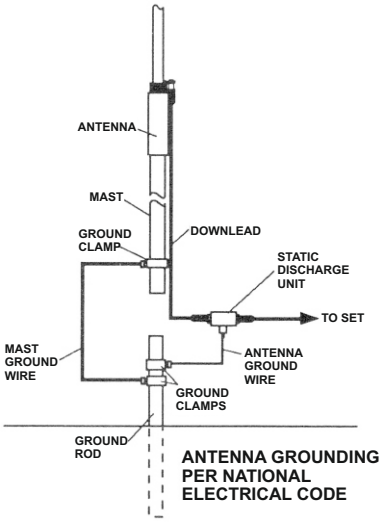

ANTENNA GROUNDING PER NATIONAL ELECTRICAL CODE

IT FOGLIO INFORMATIVO DI SICUREZZA

ATTENZIONE

L'INSTALLAZIONE DI QUESTO PRODOTTO VICINO ALLE LINEE DELL'ALTA TENSIONE E' PERICOLOSA. SEGUIRE LE ISTRUZIONI PER LA VOSTRA SICUREZZA

SIRIO antenne non si assume alcuna responsabilità se si utilizzano pratiche di installazione pericolose. E' disponibile personale qualificato e con esperienza per assistervi nell installazione, manutenzione, o lo smontaggio. Contattate il vostro installatore locale per richiedere una consulenza o assistenza.

1. Se state installando un'antenna per la prima volta, richiedete un'ASSISTENZA PROFESSIONALE. Consultate il vostro rivenditore che saprà spiegarvi il metodo più idoneo e sicuro per montare il tipo di antenna che volete utilizzare.
2. Scegliete il luogo più sicuro per l'installazione. La distanza di sicurezza dalle linee dell'alta tensione deve essere almeno due volte l'altezza dell'antenna con il palo. **RICORDATE: LE LINEE DELL'ALTA TENSIONE E LE LINEE TELEFONICHE SONO SIMILI PERTANTO STATE LONTANO DA QUALSIASI LINEA DI TENSIONE. POTREBBE UCCIDERVI !!** Quando installate la vostra antenna, **RICORDATE:**
   a) **NON USATE** scale di metallo;
   b) **NON LAVORATE** in un giorno di vento o di pioggia;
   c) **UTILIZZATE** un abbigliamento appropriato (scarpe con suola in gomma, guanti in gomma, maglia con manica lunga)
3. Se il vostro impianto inizia a cedere, allontanatevi e lasciatelo cadere. Ricordate che l'antenna, il palo, il cavo e i fili di metallo sono ottimi conduttori di elettricità. Anche il contatto più lieve di una di queste parti alle linee dell'alta tensione provoca un collegamento elettrico dalla linea all'installatore attraverso l'antenna.
4. Se una qualsiasi parte dell'antenna dovesse entrare in contatto con una linea di elettricità, **NON TOCCATELA.** Chiamate gli operatori della società elettrica, sapranno rimuoverla in modo sicuro e corretto.

ISTRUZIONI GENERALI

1. Seguire attentamente le istruzioni di montaggio sul foglio illustrativo allegato al prodotto.
2. Collegare il palo di sostegno a terra utilizzando una trecciola in rame con una sezione di almeno 6 mm^2.
3. Assicurarsi del corretto serraggio di dadi e viti.
4. Se necessario (zone molto ventose o palo di sostegno molto lungo) si consiglia l'utilizzo di tiranti di controventatura.
5. **NON SOSTARE** vicino all'antenna mentre sta trasmettendo.
6. Si consiglia di rispettare sempre la potenza massima stabilita dalle norme vigenti
7. Attaccare sul palo di sostegno l'etichetta autoadesiva **"PERICOLO"** contenuta nella confezione in posizione visibile (altezza occhi).

FR FICHE D'INFORMATION SUR LA SÉCURITÉ

ATTENTION

L'INSTALLATION DE CE PRODUIT PRES DE LIGNES A HAUTE TENSION EST DANGEREUSE. POUR VOTRE SECURITE, SUIVEZ LES INDICATIONS JOINTES

SIRIO antenne n'assume aucune responsabilité en cas d'installation défectueuse ou dangereuse. Il ya du personnel disponible, compétent et expérimenté pour aider à l'installation, l'entretien ou le démontage. Contactez votre installateur local si une consultation ou une assistance est requise.

1. Si vous installez une antenne pour la première fois, pour votre sécurité, faites appel à l'ASSISTANCE PROFESSIONELLE. Consultez votre revendeur qui pourra vous expliquer quelle méthode de montage utiliser pour la taille et le type d'antenne que vous souhaiter monter.
2. Choisir un endroit d'installation sûr, la distance de sécurité des lignes à hautes tensions doit être au moins deux fois la hauteur de l'antenne et du mât. **RAPPEL: LES LIGNES A HAUTE TENSION ET LES LIGNES TELEPHONIQUES SE RESSEMBLENT. POUR VOTRE SECURITE, VERIFIER QU'AUCUNE LIGNE NE PUISSE VOUS TUER.** Quand vous installez votre antenne, **REPPELEZ-VOUS**:
   a) **NE PAS** utiliser d'échelle métallique,
   b) **NE PAS** travailler un jour humide ou venteux,
   c) **ETRE BIEN HABILLE** (chaussures et talons en caoutchouc, gants en caoutchouc, chemise à manches longues ou veste).
3. Si l'assemblage commence à tomber, s'en éloigner et le laisser tomber. Rappelez vous que l'antenne, le mât, le câble et les files de fer sont d'excellents conducteurs de courant électrique. Même le plus léger contact d'une de ces pièces avec une ligne à haute tension peut créer un contact électrique à travers l'antenne et l'istallateur.
4. Si l'une des parties de l'antenne vient à être en contact avec une ligne à haute tension, **NE RIEN TOUCHER, NE PAS ESSAYER DE DEMOTER VOUS MEME, APPLEZ VOTRE AGENCE D'ELECTRICITE** qui démontera l'antenne avec précaution.

INSTRUCTIONS GENERALS pour antennes avec mâts:

1. Suivre avec attention les instructions de mountage du produit.
2. Brancher votre mât à la masse en utilisant un fil de cuivre d'une section minimale de 6 mm^2.
3. Faire attention au bon serrage des écrous et vis.
4. Si nécessaire (endroits venteux ou mât très longs) l'utilisation de haubans est recommandèe.
5. Quand votre antenne est en mode TX (transmission) **NE PAS** rester à côté.
6. Il est recommandé de respecter strictement la puissance maximale établie par la loi.
7. Coller l'étiquette autocollante **«ATTENTION»** jointe à l'antenne sur votre mât à hauteur des yeux.

DE SICHERHEITS-INFORMATIONSBLATT

WARNUNG

DIE INSTALLATION DIESES PRODUKTS IN DER NÄHE VON STROMLEITUNGEN IST GEFÄHRLICH. BEFOLGEN SIE ZU IHRER SICHERHEIT DIE FOLGENDEN ANWEISUNGEN.

SIRIO Antenne übernimmt keine Haftung, wenn fehlerhafte oder gefährliche Installationspraktiken angewandt werden. Es steht geschultes und erfahrenes Personal zur Verfügung, um Sie bei der Installation, Wartung oder Demontage zu unterstützen. Kontaktieren Sie Ihren Fachhändler, wenn Beratung oder Unterstützung erforderlich ist

1. Wenn Sie zum ersten Mal eine Antenne installieren, sollten Sie sich von Ihrem Fachhändler beraten lassen. Er kann Ihnen erklären, welche Montagemethode für die Größe und den Typ der Antenne, die Sie montieren wollen, zu verwenden ist.
2. Wählen Sie Ihren Installatiosort unter dem Gesichtspunkt der Sicherheit aus. Der Sicherheitsabstand von Stromleitungen sollte mindestens das Doppelte der gemeinsamen Länge von Antenne und Mast betragen. **OFT KÖNNEN SIE ALS LAIE ELEKTRISCHE STROMLEITUNGEN UND TELEFONLEITUNGEN NICHT UNTERSCHEIDEN. - GEHEN SIE ZU IHRER EIGENEN SICHERHEIT ZUNÄCHST EINMAL DAVON AUS, DASS JEGLICHE LUFTLEITUNGEN SIE TÖTEN KÖNNTE !!** Wenn Sie Ihre Antenne installieren, **DENKEN SIE DARAN:**
   a) **Verwenden sie keine Metall-Leiter.**
   b) **Führen sie diese Arbeiten, wenn möglich, nicht an regnerischen oder stürmischen Tagen aus.**
   c) **Achten sie auf richtige Kleidung:** (Schuhe mit Gummisohlen und -absätzen, Gummihandschuhe, Hemd bzw. Jacke mit langen Armen).
3. Sollte bei der Montage Antenne oder Mast aus irgendwelchen Gründen hinfallen, sollten Sie diese in diesem Moment nicht mehr berühren. Denken Sie daran, daß Antenne, Mast, Kabel und metallische Verankerungsdrähte ausgezeichnete Leiter von elektrischen Strom sind. Selbst die leichteste Berührung dieser Teile mit einer Stromleitung erzeugt einen elektrischen Stromkreis und kann Sie sofort töten.
4. Wenn irgendein Teil des Antennensystems mit einer Stromleitung in Kontakt kommen sollte, **BERÜHREN SIE ES NICHT UND VERSUCHEN SIE NICHT, ES SELBST ZU ENTFERNEN. RUFEN SIE IHRE ÖRTILICHE ELEKTRIZITÄTSGESELLSCHATF AN.** Die Fachleute dieser Gesellschaften werden das Problem sicher und gefahrlos lösen.

ALLGEMEINE MONTAGEANWEISUNGEN FÜR ANTENNEN, DIE AUF EINEM MAST MONTIERT SIND:

1. Befolgen Sie sorgfältig die Montageanweisungen des Produkts.
2. Verbinden Sie Ihren Mast mit einem guten Erdungspotential, indem Sie einen Kupferdraht mit einem Querschnitt von mindestens 6 mm^2 verwenden.
3. Achten Sie auf den korrekten Sitz von Muttern und Schrauben.
4. Wenn notwendig (Gegenden mit häufigen starken Winden bzw. Stürmen oder sehr hohe Masten) wird die Verwendung von speziellen Abspannseilen (Erhältlich im guten Fachhandek) empfohlen.
5. **Halten Sie sich nicht** in der Nähe Ihrer Antenne auf, während Ihr Funkgerät im Sendemodus ist.
6. Es wird empfohlen, die gesetzlich fesgelegte maximale Leistung des Funkgerätes nicht zu überschreiten.
7. Kleben Sie das der Antenne beiliegende selbstklebende Etikett **"ACHTUNG"** in Augenhöhe an Ihren Mast.

ES HOJA DE INFORMACIÓN DE SEGURIDAD

ATENCION

LA INSTALACIÓN DE ESTE PRODUCTO CERCANO A UNA LÍNEA DE ALTA TENSIÓN PUEDE SER PELIGROSO. SIGA ATENTAMENTE LAS INSTRUCCIONES PARA SU SEGURIDAD.

SIRIO Antenne no asume ninguna responsabilidad si se efectúan acciones irresponsables o peligrosas en el momento de la instalación. Hay personal disponible, capacitado y con la experiencia necesaria para ayudar o realizar el mantenimiento, montaje y desmontaje. Póngase en contacto con su instalador local si precisa asesoramiento o asistencia.

1. Si usted pretende instalar una antena por primera vez, déjese aconsejar por un profesional, consulte en su establecimiento habitual y siga todas sus recomendaciones.
2. Elija el lugar más seguro para la instalación. La distancia de seguridad con respecto a la línea de alta tensión, deberá ser al menos dos veces la altura de la antena, una vez instalada en el mástil. **RECUERDE: LAS LÍNEAS DE ALTA TENSIÓN Y LAS LÍNEAS TELEFÓNICAS SON PARECIDAS. PARA SU SEGURIDAD MANTENGASE ALEJADO DE ELLAS.** Cuando instale la antena, **RECUERDE:**
   a) **NUNCA utilice una escalera metálica**
   b) **NO pretenda instalar la antena** en un día con viento, lluvia o nieve.
   c) **UTILICE** ropa y material adecuado (zapatos aislantes con suela de goma, guantes de goma, camisa de manga larga)
3. Si la instalación no está bien efectuada, ésta podría caer, ocasionar grandes desperfectos e incluso causando daños a terceros. Le recomendamos proceda con extremada precaución.
4. Si una parte de la antena entrara en contacto con algún cable eléctrico **ALEJESE INMEDIATAMENTE.** Llame urgentemente a la compañía eléctrica, **NO intente resolver por su cuenta el incidente**. Ellos sabrán solucionar el problema de un modo correcto y seguro.

INSTRUCCIONES GENERALES

1. Siga atentamente las instrucciones de la hoja ilustrativa que acompaña al producto.
2. Si tiene alguna duda **NO prosiga con la instalación**. Consulte personal cualificado
3. Derive a tierra el mástil de sujeción mediante un cable de 6mm^2. de sección mínimo.
4. Verifique que los tornillos y tuercas han sido debidamente fijados.
5. Si es necesario (zonas de mucho viento o mástiles muy largos) utilice tirantes de vientos.
6. **NO PERMANEZCA** cerca de la antena mientras se está transmitiendo.
7. Se aconseja siempre respetar la potencia máxima establecida por las normas vigentes
8. Coloque en el mástil la etiqueta autoadhesiva "**PELIGRO**" suministrada con la antena, situela en un lugar lo suficientemente visible. (Altura de la vista)

PL KARTA INFORMACJI BEZPIECZEŃSTWA

UWAGA

INSTALOWANIE ANTEN W POBLIŻU LINII WYSOKIEGO NAPIĘCIA JEST NIEBEZPIECZNE !

SIRIO Antene nie ponosi żadnej odpowiedzialności w razie awarii instalacji w wyniku błędnego zamontowania lub stosowanych niebezpiecznych praktyk. W przypadku problemów podczas montażu należy skontaktować się z przeszkolonym i doświadczonym personelem jak i w celu konserwacji czy demontażu.

1. Montując antenę po raz pierwszy, dla własnego bezpieczeństwa, poproś o pomoc specjalistów.
2. Wybierz starannie miejsce montażu w odległości minimum 2 długości anteny plus masztu od linii energetycznej. Nie używaj metalowej drabiny, załóż buty z gumowa podeszwą, rękawiczki, koszulę z długim rękawem i nie pracuj w złych warunkach pogodowych.
3. Jeżeli montowana konstrukcja zaczyna się przewracać nie podtrzymuj jej.
4. Jeżeli część instalacji już dotknęła kabli z prądem nie usuwaj jej sam tylko zadzwoń od zakładu energetycznego.

Podstawowe instrukcje:

1. Zapoznaj się z instrukcją produktu.
2. Uziemij maszt przewodem min. 6 mm ¸.
3. Starannie skręcaj połączenia.
4. Używaj odpornych na wiatr elementów masztu.
5. Nie przebywaj w pobliżu anteny podczas nadawania.
6. Nie przekraczaj limitów mocy.
7. Oznacz instalacje ostrzegawczą nalepką «**UWAGA**».

RU информация о безопасности

ВНИМАНИЕ

установка данного устройства возле высоковольтных линий электропередачи опасна для жизни! Следуйте прилагаемой инструкции!

SIRIO Antenne не несет никакой ответственности за неисправности, произошедшие в результате неправильного монтажа. Привлекайте обученный и опытный персонал для оказания помощи в установке, техническом обслуживании, сборке или разборке. Свяжитесь с вашим местным установщиком для консультации или помощи, в случае необходимости.

1. Если Вы устанавливайте антенну в первый раз, найдите профессионального помощника. Ваш дилер может объяснить Вам способ установки антенны в зависимости от типа и размера антенны.
2. Тщательно выбирайте место установки. Расстояние до высоковольтной ЛЭП должно, как минимум, дважды превышать высоту мачты и антенны. **ПОМНИТЕ: высоковольтные ЛЭП, а также телефонные и другие кабельные линии находятся под напряжением, которое опасно для жизни!**
   Во время установки антенны **ПОМНИТЕ:**
   а) не используйте металлическую лестницу;
   б) не работайте во влажную и ветряную погоду;
   в) наденьте рубашку или куртку с длинными рукавами, обувь на резиновой подошве, а также используйте резиновые перчатки.
3. Если собираемая часть начинает падать немедленно отойдите в сторону и не препятствуйте падению. Помните, что антенна, мачта, кабель и металлические провода являются проводниками электрического тока. Даже легкое касание любой из составных частей антенной системы к открытому источнику электроэнергии может привести к короткому замыканию или поражению электрическим током.
4. Если одна из частей устанавливаемой антенной системы в результате падения или по другой причине соприкоснулась с источником электроэнергии, **НЕ ПЫТАЙТЕСЬ САМОСТОЯТЕЛЬНО УСТРАНИТЬ ЭТО, ПОЗВОНИТЕ В АВАРИЙНУЮ СЛУЖБУ!**

ОСНОВНЫЕ ИНСТРУКЦИИ ПО УСТАНОВКЕ АНТЕННЫ НА МАЧТУ

1. Внимательно следуйте инструкции по установке антенны.
2. Заземлите мачту медным проводом с сечением не менее 6 кв. мм.
3. Установите антенну, обращая внимание на правильность сборки и надежность затяжки болтов и гаек.
4. Если необходимо (районы с повышенными ветряными нагрузками или слишком длинная мачта) используйте специальные противоветровые направляющие.
5. Не находитесь вблизи антенны во время передачи.
6. Рекомендуется использовать максимально разрешенную мощность передачи в соответствии с законодательством.
7. Наклейте этикетку **"ОПАСНО"** упакованную вместе с антенной на мачту, на уровне глаз

CZ BEZPECNOSTNÍ INFORMACNÍ LIST.

VAROVANI

NEMANIPULUJTE S ANTENOU POBLIZ ELEKTRICKEHO VEDENI !

SIRIO nepřebírá žádnou zodpovědnost v případě neodborné či nebezpečné montáže. Montáž, údržbu nebo demontáž svěřte kvalifikovanémua odbornému servisu.

1. Pokud nemate s montazi zkusenosti, pouzijte odbornou firmu
2. Pouzivejte ochranny oblek
3. Pri istalaci do anteny nevysilejte
4. Pri jakemkoli kontaktu s elektrickym vedenim informujte rozvodne zavody

Zakladni instrukce:

1. Pozorne ctete montazni navod
2. Antenni stozar uzemnete vodicem 6mm^2
3. Zvysenou pozornost venujte kontaktum a spojum
4. Nemontujte antenu v extremne nepriznivem pocasi
5. Pri vysilani se nedotykejte zarice
6. Nepouzivejte vysi vykon nez je vyrobcem urceno
7. Antenu oznacte stitkem "**NEBEZPEÈI**"

GPE 5/8 GPS 1/2

26.4 ..... 29 MHz Tunable Base Station Antennas

SPECIFICATIONS

Electrical Data

Type	: GPE 5/8.....5/8 λ Ground Plane
	: GPS 1/2..... 1/2 λ end feed dipole
Frequency range	: 26.4...29.0 MHz tunable (see table)
Impedance	: 50 Ω
Radiation (H-plane)	: 360° omnidirectional
Polarization	: Linear Vertical
Gain	: GPE 5/8.....1.2 dBd, 3.35 dBi
	: GPS 1/2.....0 dBd, 2.15 dBi
Bandwidth @ SWR ≤2	: ≥ 1600 KHz
SWR @ res. freq.	: ≤ 1.3
Max Power	: 250 Watts (CW) continuous
	: 750 Watts (CW) short time
Feed system/ position	: Transformer DC-ground / base
Connector	: UHF-female

Mechanical Data

Materials	: Aluminium, Steel, Copper, Nylon
Wind Load/Resistance	: 160 N @ 150Km/h / 130 Km/h
Wind surface	: 0.12 m^2
Length (approx.)	: 5950 mm both models
Weigth (approx.)	: GPE 5/8.....2500 gr
	: GPS 1/2.....2100 gr
Radial lenght	: 1320 mm (GPE 5/8 only)
Mounting Mast	: ∅ 35-42 mm

WARNING

INSTALLATION OF THIS PRODUCT NEAR POWER LINES IS DANGEROUS. FOR YOUR SAFETY AND BEFORE YOU BEGIN INSTALLATION, READ THE SEPARATE SAFETY INFORMATION SHEET.

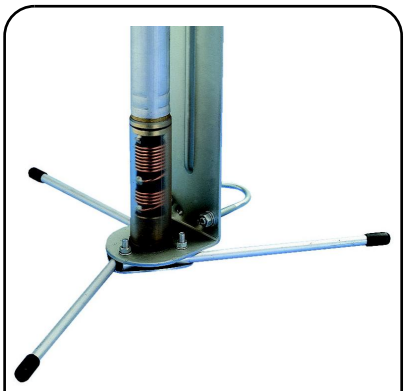

GPE 5/8 Coil

GPS 1/2 Coil

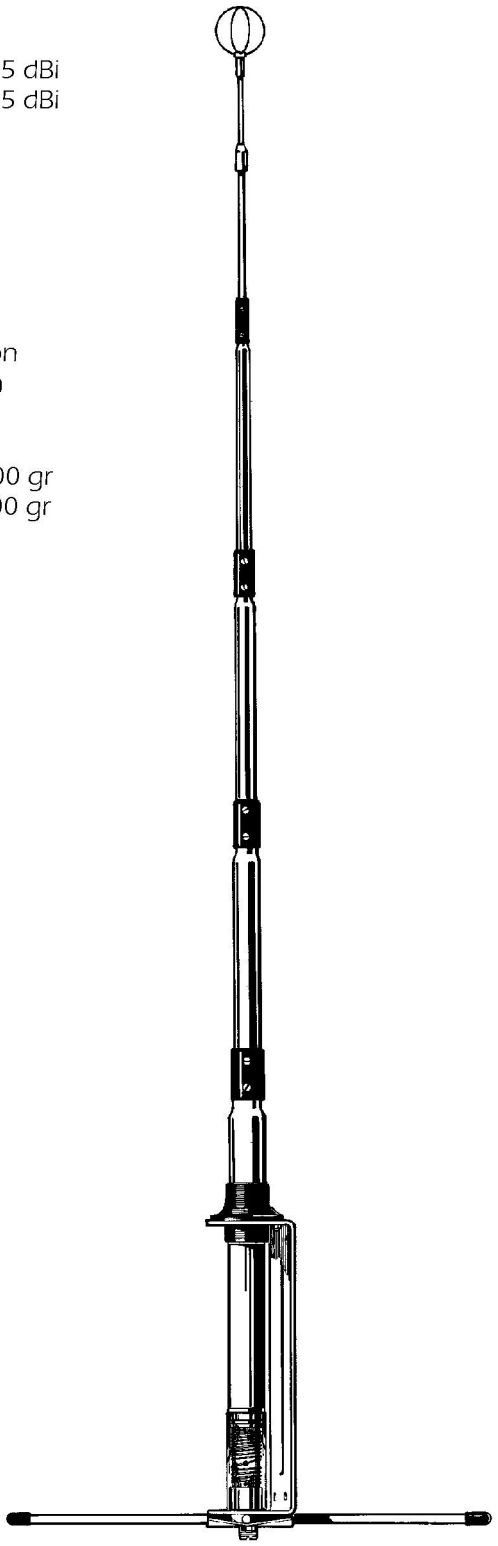

GPE 5/8

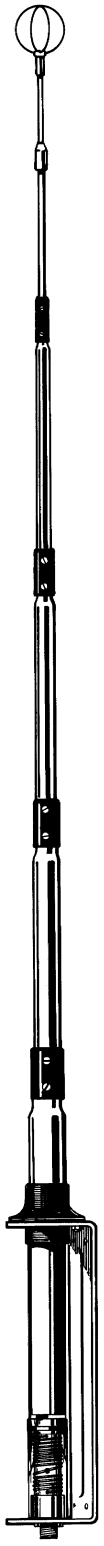

GPS 1/2

SIRIO antenne HI-QUALITY ANTENNAS MADE IN ITALY

ID037

TUNING TABLE

Freq. (MHz)	GPE 5/8 L (mm)	GPS 1/2 L (mm)
26.4	850	900
27.0	642	745
27.185	600	660
27.5	487	562
28.0	340	395
(10 m band) 28.5	183	228
29.0	15	60

Mounting needed tools:
n. 1 tape rules (meter)
n. 1 phillips screwdriver
n. 1 10 mm open key
n. 1 19 mm open key
Additional tools for GPE 5/8:
n.1 flat screwdriver
n.1 8 mm open key

Parts List		
Pos	*Q.ty*	*Description*
1	1	5 sections telescopic aluminium whip with coil
2	4	plastic jointing sleeves (4 different sizes)
3	8	∅ 3.9x6.5 phillips tapping screws
4	1	top section with cage
5	1	M4x4 hexagon socket set screw cup point
6	1	2mm hexagonal key
7	1	Rubber washer
8	1	M16 spring lock washer
9	1	19mm hexagonal nut
10	1	steel bracket
11	4	M6 washers
12	4	M6 spring lock washers
13	4	M6 hexagonal nuts
14	2	M6x160mm U-bolt
GPE 5/8 additional parts:		
15	3	∅ 6x8x1320mm aluminium tubes
16	1	Metal Plate
17	3	M5x25 screws
18	3	M5 washers
19	3	M5 hexagonal nuts
20	3	PVC cap for ∅ 8mm aluminium tube

MOUNTING INSTRUCTIONS

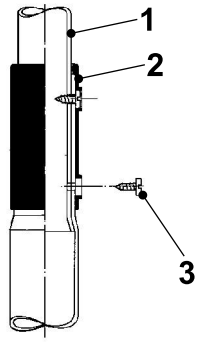

1

Pull out the sections of telescopic aluminium whip (**1**), insert the jointing sleeve on the tubes (**2**) and lock they using the phillips screws (**3**).

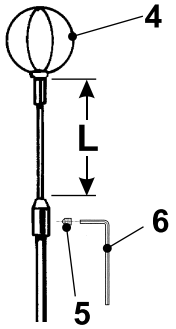

2

Insert the top section with the cage (**4**) at **L** (see tuning table for frequency) and lock it using the screw (**5**) and 2mm hexagonal key (**6**).

NOTE: Use the table just as a guide. For fine-tuning please use an SWR-meter

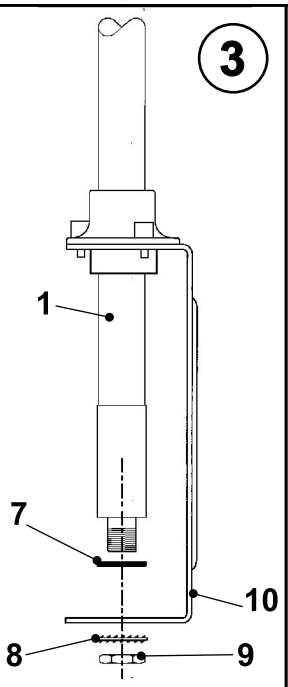

3

Fit the rubber washer (**7**) on the bottom of antenna (**1**). Well lock washer (**8**) and nut (**9**) to the steel bracket (**10**) by using the suitable 19mm key.

Mount the antenna on the mast using parts (**11**) (**12**) (**13**) (**14**) in according to the picture.

4

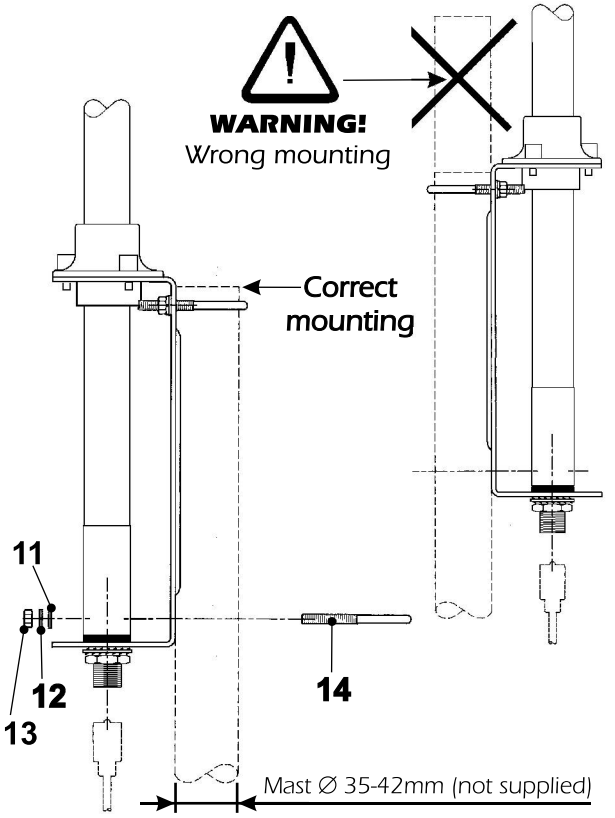

Radials mounting GPE 5/8 ONLY

5

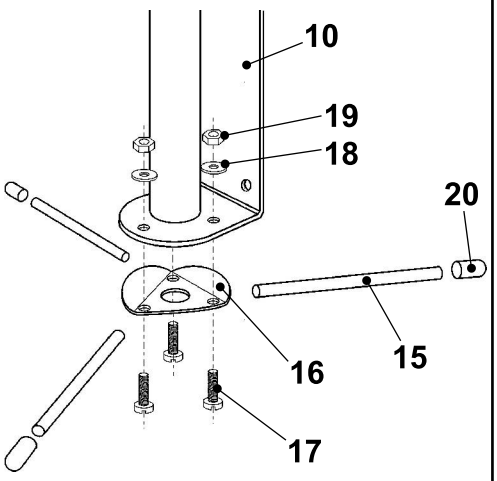

Place the aluminium radials (**15**) between the steel bracket (**10**) and the metal plate (**16**) in according to the picture and lock they by using the supplied screws (**17**) washer (**18**) and nut (**19**). Finally mount the PVC cap (**20**).

SIRIO antenne HI-QUALITY ANTENNAS MADE IN ITALY

© Copyright SIRIO antenne - Technical Data are subjected to change - Printed in ITALY - Rev. 10/09/2011 - Cod. ID037